Website: https://store.34teknoloji.com.tr/
E-Mail: info@34teknoloji.com.tr
Phone: +905425113099

UNF Threads cartridge double-acting flow control valves " high rate "

FT 265/2

Double-acting flow control valves available from 3/4" to 7/8" size- UNF THREADS. Max working pressure 320 BAR, adjustable oil flow rate from 5 to 90 Lt./min. (depending on the size)

Double-acting control
No pressure compensated flow control
UNF threads
Carbon steel

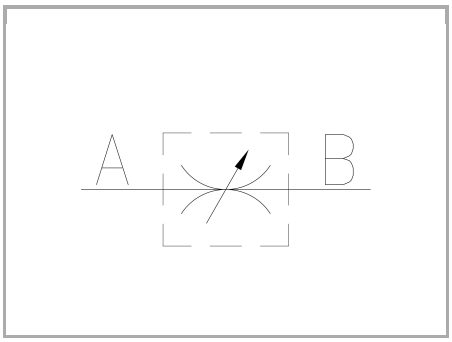

Technical information

Technical description

They control a flow in both directions.

Materials

CORPO / BODY	Acciaio/Steel 11 S Mn Pb 37-UNI EN 10087
SPILLO DI REGOLAZIONE / ADJUSTING NEEDLE	Acciaio legato/Alloy Steel
GUARNIZIONI / GASKETS	Di serie NBR - A richiesta FPM/Standard NBR-on demand FPM
ANELLI ANTIESTRUSIONE / ANTIEXTRUSION RINGS	PTFE
MANOPOLA TIPO MA - RA / KNOB TYPE MA - RA	Alluminio/Aluminum GD AlSi12- UNI EN AB 46100
MANOPOLA TIPO MP / KNOB TYPE MP	ABS

Technical data

TIPO / TYPE	PRESSIONE ESERCIZIO BAR / WORKING PRESSURE BAR	MIN. PRESSIONE SCOPPIO BAR / MIN. BURSTING PRESSURE BAR	TEMPERATURA ESERCIZIO / WORKING TEMPERATURE	GRADO DI FILTRAZIONE µm / FILTRATION GRADE µm
34	320	1300	-20°C/+100°C	25
78	320	1300	-20°C/+100°C	25

Website: https://store.34teknoloji.com.tr/
E-Mail: info@34teknoloji.com.tr
Phone: +905425113099

Dimensional tables and drawings

TIPO / TYPE	ØA UNI 4534	ØB	C	D	E	ØF	ØF1	G	H	L	CH	PESO / WEIGHT KG
34	3/4" -16 UNF	12,7	15,3	12,7	28	27	50	40,7	68,7	6	24	0,112
78	7/8" -14 UNF	15,8	17,5	15	32,5	33	70	46	78,5	8	27	0,115

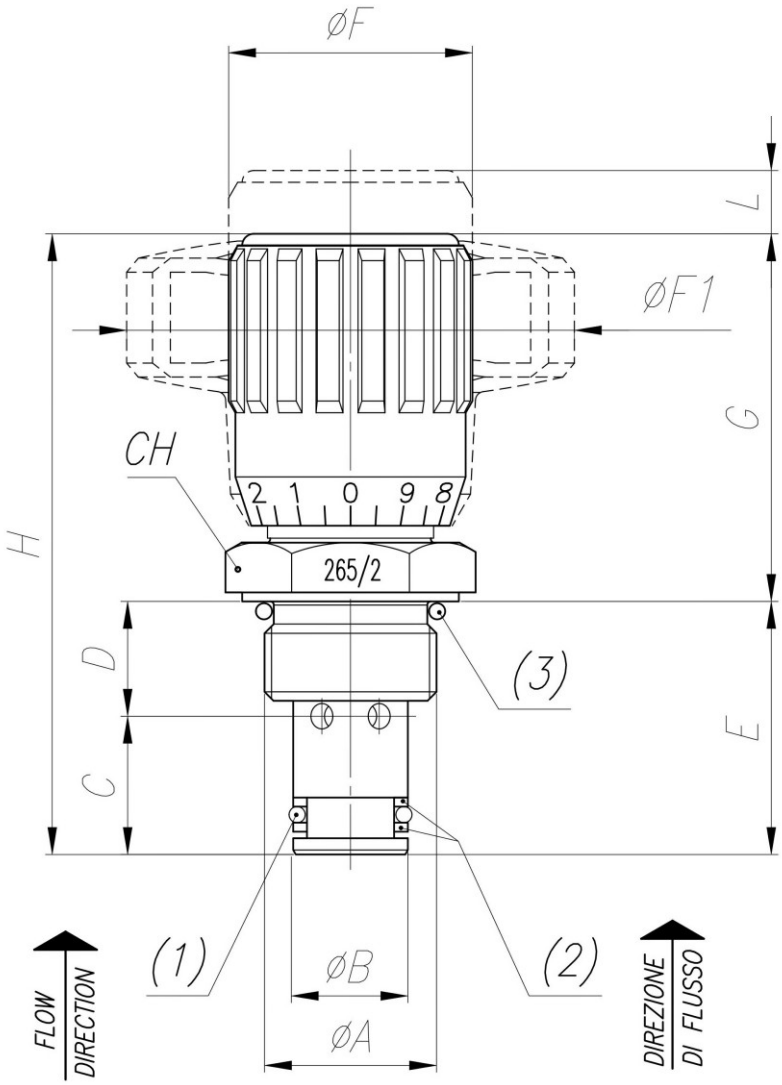

Website: https://store.34teknoloji.com.tr/
E-Mail: info@34teknoloji.com.tr
Phone: +905425113099

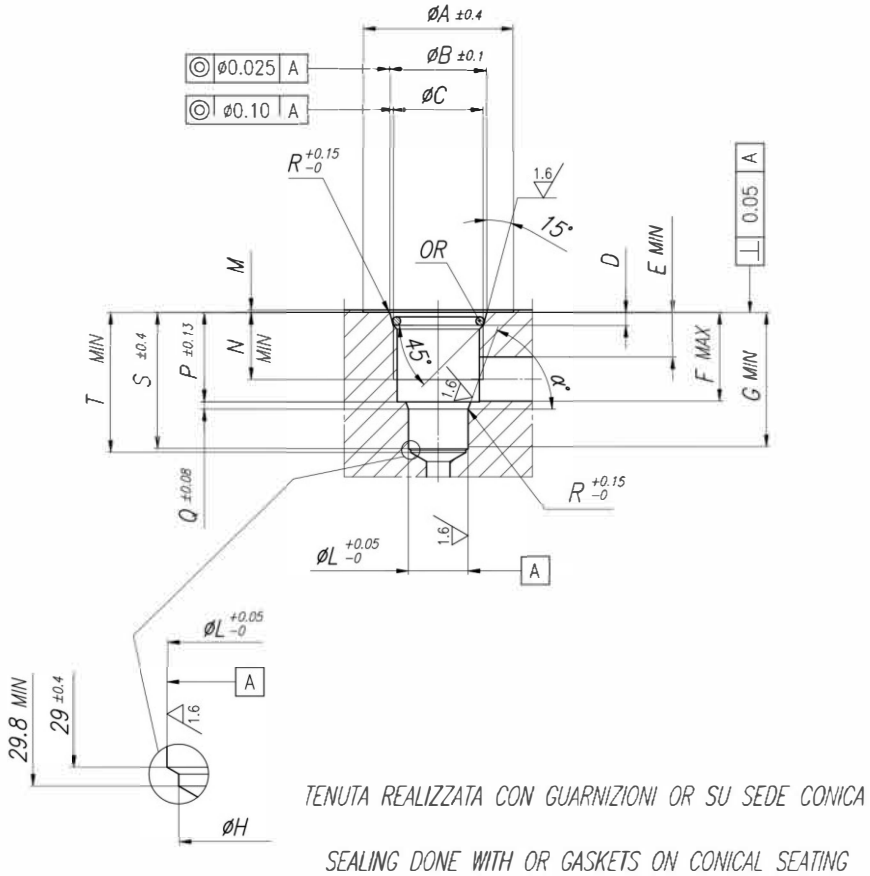

	ØA	ØB	C UNI 4534	D	E	F	G	ØH	ØL	M	N	P	Q	R	S	T	α°	OR
34	32	20.65	3/4"	2.75	9.5	18.9	28.6	11.7	12.7	0.5	14.3	19.05	1.53	0.1	29	29.8	70	2068
78	32	24	7/8"	2.75	12.35	24.25	31.85	15	15.875	0.5	15.75	24.45	1.4	0.1	33.75	34.5	60	3075